Roughneck

OWNER'S MANUAL — Please read before using this equipment.

Tackle tough obstacles in your rockin' and tumblin' Roughneck truck!

Your RadioShack Roughneck is a rough and tumble truck tough enough to handle hard-core obstacles in the hallway in your house or on the sidewalk outside. Built to $^{1}/_{14}$ scale, it can reach speeds of up to 660 feet per minute and comes in two frequencies (27 and 49 MHz), so you can dazzle your friends with your truck's sonic speed!

THE FCC WANTS YOU TO KNOW

Your truck might cause TV or radio interference even when it is operating properly. To determine whether your truck is causing the interference, turn off the truck and release the transmitter's control levers. If the interference goes away, your truck is causing it.

Try to eliminate the interference by moving your truck and transmitter away from the TV or radio or contacting your local RadioShack store for help.

If you cannot eliminate the interference, the FCC requires that you stop using your truck.

INSTALLING BATTERIES

Caution:

- Use only fresh batteries of the required size and recommended type.
- Do not mix old and new batteries, different types of batteries (standard, alkaline, or rechargeable), or rechargeable batteries of different capacities.
- If you do not plan to use the truck and its transmitter for several days, remove the batteries. Batteries can leak chemicals that can damage electronic parts.
- Never leave dead or weak batteries in the truck.
- Dispose of batteries promptly and properly; do not burn or bury them.

In The Transmitter

The transmitter uses one 9-volt battery (not supplied). For the best performance and longest life, we recommend RadioShack alkaline batteries.

1. Slide the battery compartment's cover in the direction of the arrow to remove it.
2. Place a battery in the battery compartment according to the polarity symbols (+ and –) marked inside.
3. Replace the cover and snap it closed.

When the transmitter's range decreases, replace its battery.

In The Truck

Your truck uses 8 AA batteries or a 9.6V rechargeable battery pack (nei-

RadioShack®

www.radioshack.com℠

© 2001 RadioShack Corporation. All Rights Reserved.
RadioShack and RadioShack.com are trademarks
used by RadioShack Corporation.

ther supplied, available at your local RadioShack store) for power.

You can install and use AA batteries while the battery pack is charging.

Warning: If you use alkaline batteries to power the motor, they can get very hot. To protect yourself from injury, wait about 10 minutes after you stop using the truck before removing the batteries.

Note: Before you use a battery pack, you must charge it in a battery-pack charger (available at your local RadioShack store). Follow the charger's instructions to charge the battery pack.

1. Slide **ON/OFF** on the truck to **OFF**.

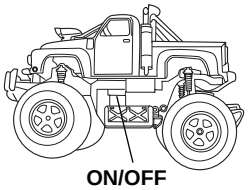

2. Use a coin to turn the battery compartment's latch counterclockwise until it stops, then lift the cover.

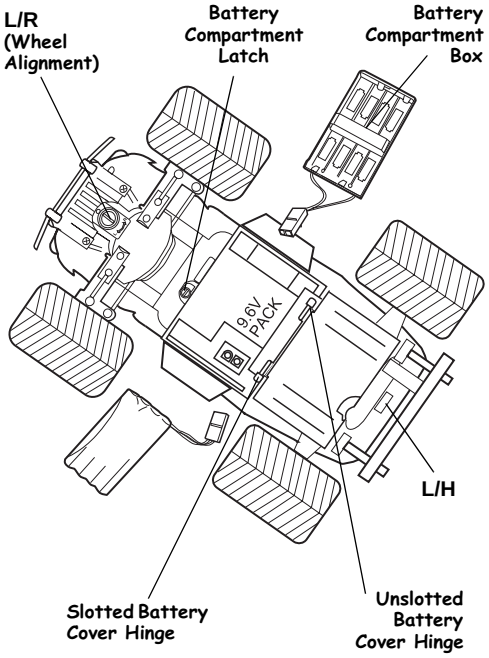

Notes:

- *To remove the battery compartment cover*, hold the truck with the back bumper toward you, open the cover, grasp it by the top left corner, and pull it off.
- *To replace the battery compartment cover*, place one tab in the unslotted hinge, and snap the other tab into the slotted hinge.

3. *If you are using AA batteries,* place them in the supplied battery compartment box according to the polarity symbols (+ and –) marked inside.

   If you are using a 9.6V Ni-Cd battery pack, remove the supplied battery compartment box from the battery compartment and pull up the connector. Attach the battery pack's connector to the truck's matching connector. Do not force them. They fit together only one way. Then place the pack in the recessed area.

4. Close the cover and turn the latch clockwise until it stops to secure it.

If the truck runs slowly or not at all, recharge the rechargeable batteries or replace the alkaline batteries.

Important: The EPA certified RBRC® Battery Recycling Seal on the nickel-cadmium (Ni-Cd) battery indicates RadioShack is voluntarily participating in an industry program to collect and recycle these batteries at the end of their useful life, when taken out of service in the United States or Canada. The RBRC program provides a convenient alternative to placing used Ni-Cd batteries into the trash or the municipal waste stream, which may be illegal in your area. Please call 1-800-THE-SHACK (1-800-843-7422) for information on Ni-Cd battery recycling and disposal bans/restrictions in your area. RadioShack's involvement in this program is

part of the company's commitment to preserving our environment and conserving our natural resources.

DRIVING THE ROUGHNECK

Warning: Never play with your truck in the street.

1. Slide **ON/OFF** on the truck to **ON**. The truck vibrates for about 10 seconds.

2. Slide **L/H** beneath the rear bumper to **H** for driving on a smooth surface or to **L** for driving on a rough or sloping surface.

   Note: If you cannot easily slide the switch, turn the truck's back wheels slightly by hand, then try again.

3. Use the transmitter's control levers to drive and steer the truck.

   Left Control Lever

   - Push forward to move forward.
   - Push forward all the way for turbo power.
   - Pull back to move backward.
   - Release to stop.

   Right Control Lever

   - Push left to move left
   - Push right to move right.
   - Release to go straight.

4. When you finish driving the truck, slide **ON/OFF** on the truck to **OFF**.

Wheel Alignment

If the truck does not go in a straight line when you release the right control lever, use a coin to adjust the wheel alignment control on the bottom of the truck toward **R** if the truck is pulling to the left, or toward **L** if the truck is pulling to the right.

HELPFUL HINTS

The following hints can help you get the most enjoyment from your truck.

- Running your truck continuously for long periods generates high heat levels, which cause wear and tear on the motor. To help keep heat levels down, when the truck's battery power dies, let the truck cool at least 10 minutes before installing new or newly charged batteries.

- If the truck's motor runs but the truck does not respond to the transmitter, move closer to the truck and try again.

- If someone uses a CB nearby, it might interfere with control of the truck. If this happens, move the truck away from the CB.

- You cannot operate your truck near devices with transmitters that use the same frequency, 27 MHz or 49 MHz. Check the truck's packaging to see which frequency your truck uses.

- If the truck moves slowly, but the batteries are fresh, check the wheel mechanisms for lint, thread, hair or dust.

CARE

Keep the truck dry; if it gets wet, wipe it dry immediately. Use and store the truck only in normal temperature environments. Handle the truck carefully; do not drop it. Keep the truck away from dust and dirt, and wipe it with a damp cloth occasionally to keep it looking new.

Modifying or tampering with the truck's internal components can cause a malfunction and might invalidate its warranty and void your FCC authorization to operate it. If your truck is not performing as it should, take it to your local RadioShack store for assistance.

USER-REPLACEABLE PARTS

You can order these easily replaceable parts for your truck through your local RadioShack store. Simply identify the part(s) you need from the exploded view, then find the part number in the parts list.

Part Description	RSU #
Transmitter Unit: 27 MHz : 49 MHz (not shown)	12333589 1233597
Receiver Antenna Wire	12333605
Battery Cover (Car)	12333613
Battery Cover (Transmitter) (not shown)	10606440
Battery Compartment Box	12333621
Hardware Kit	12333639
Suspension Pillar Assembly (Rear)	12333647
Front Bumper Guard	12137139
Rear Wheel Assembly (Left/Right)	12333654
Car Body Assembly and Label	12333662
Owner's Manual (not shown)	12333670
Service Manual (not shown)	12333688

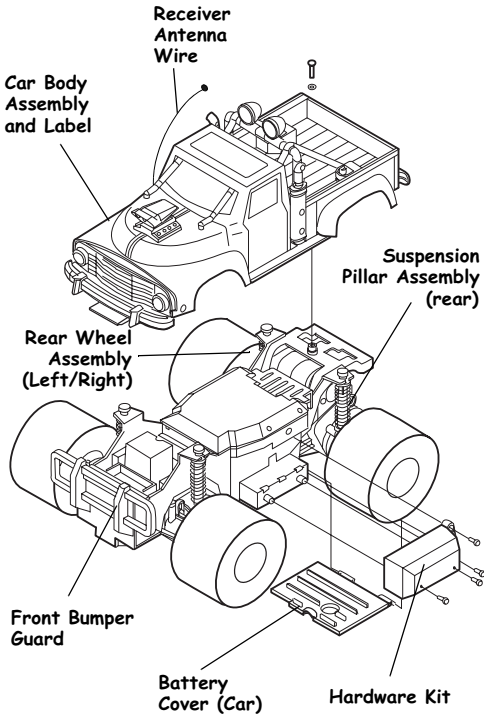

Limited Ninety-Day Warranty

This product is warranted by RadioShack against manufacturing defects in material and workmanship under normal use for ninety (90) days from the date of purchase from RadioShack company- owned stores and authorized RadioShack franchisees and dealers. EXCEPT AS PROVIDED HEREIN, RadioShack MAKES NO EXPRESS WARRANTIES AND ANY IMPLIED WARRANTIES, INCLUDING THOSE OF MERCHANTABILITY AND FITNESS FOR A PARTICULAR PURPOSE, ARE LIMITED IN DURATION TO THE DURATION OF THE WRITTEN LIMITED WARRANTIES CONTAINED HEREIN. EXCEPT AS PROVIDED HEREIN, RadioShack SHALL HAVE NO LIABILITY OR RESPONSIBILITY TO CUSTOMER OR ANY OTHER PERSON OR ENTITY WITH RESPECT TO ANY LIABILITY, LOSS OR DAMAGE CAUSED DIRECTLY OR INDIRECTLY BY USE OR PERFORMANCE OF THE PRODUCT OR ARISING OUT OF ANY BREACH OF THIS WARRANTY, INCLUDING, BUT NOT LIMITED TO, ANY DAMAGES RESULTING FROM INCONVENIENCE, LOSS OF TIME, DATA, PROPERTY, REVENUE, OR PROFIT OR ANY INDIRECT, SPECIAL, INCIDENTAL, OR CONSEQUENTIAL DAMAGES, EVEN IF RadioShack HAS BEEN ADVISED OF THE POSSIBILITY OF SUCH DAMAGES.

Some states do not allow limitations on how long an implied warranty lasts or the exclusion or limitation of incidental or consequential damages, so the above limitations or exclusions may not apply to you.

In the event of a product defect during the warranty period, take the product and the RadioShack sales receipt as proof of purchase date to any RadioShack store. RadioShack will, at its option, unless otherwise provided by law: (a) correct the defect by product repair without charge for parts and labor; (b) replace the product with one of the same or similar design; or (c) refund the purchase price. All replaced parts and products, and products on which a refund is made, become the property of RadioShack. New or reconditioned parts and products may be used in the performance of warranty service. Repaired or replaced parts and products are warranted for the remainder of the original warranty period. You will be charged for repair or replacement of the product made after the expiration of the warranty period.

This warranty does not cover: (a) damage or failure caused by or attributable to acts of God, abuse, accident, misuse, improper or abnormal usage, crash, collision, impact, violent contact, failure to follow instructions, improper installation or maintenance, alteration, lightning or other incidence of excess voltage or current; (b) any repairs other than those provided by a RadioShack Authorized Service Facility; (c) consumables such as fuses or batteries; (d) cosmetic damage; (e) transportation, shipping or insurance costs; or (f) costs of product removal, installation, set-up service adjustment or reinstallation.

This warranty gives you specific legal rights, and you may also have other rights which vary from state to state.

RadioShack Customer Relations, 200 Taylor Street, 6th Floor, Fort Worth, TX 76102

We Service What We Sell

12/99

RadioShack Corporation
Fort Worth, Texas 76102

60-4285
04A01
Printed in China